Electrolux

Modular Cooking Range Line 700XP Two Wells Freestanding Electric Fryer 14 liter

ITEM #

MODEL #

NAME #

SIS #

AIA #



371085 (E7FREH2FF0)	14+14-lt electric fryer free standing with 2 wells and 2 baskets, internal heating elements
371144 (E7FREH2FFN)	14+14-lt electric fryer free standing with 2 wells and 2 baskets, internal heating elements

Short Form Specification

Item No.

To be installed on height adjustable feet in stainless steel. High efficiency tilting incoloy armoured heating elements (17.4kW) placed inside the wells. Deep drawn wells. Oil drains through a tap into a container under the well. Exterior panels in stainless steel with Scotch Brite finish. One piece pressed work top in 1.5 mm thick stainless steel. Right-angled side edges to allow flush-fitting junction between units.

APPROVAL:

Main Features

- Unit to be mounted on height adjustable feet in stainless steel.
- Thermostatic regulation of oil temperature up to a maximum of 185 °C.
- Overheat protection thermostat as standard on all units.
- Oil drains through a tap into a drainage container positioned under the well.
- All major compartments located in front of unit for ease of maintenance.
- IPX 4 water protection.
- Incoloy armoured heating elements located inside the well can be lifted up for easier cleaning.

Construction

- Interior of well with rounded corners for ease of cleaning.
- All exterior panels in Stainless Steel with Scotch Brite finishing.
- One piece pressed 1.5 mm work top in Stainless steel.
- Model has right-angled side edges to allow flush fitting joints between units, eliminating gaps and possible dirt traps.

Included Accessories

• 2 of Door for open base cupboard	PNC 206350
• 2 of Full size basket for 14 and 15lt free standing fryers	PNC 921691

Optional Accessories

• Junction sealing kit	PNC 206086 ❑
• 4 wheels, 2 swivelling with brake (700/900XP). It is mandatory to install with base supports for feet/wheels.	PNC 206135 ❑
• Flanged feet kit	PNC 206136 ❑
• Frontal kicking strip for concrete installation, 800mm	PNC 206148 ❑
• Frontal kicking strip for concrete installation, 1000mm	PNC 206150 ❑
• Frontal kicking strip for concrete installation, 1200mm	PNC 206151 ❑
• Frontal kicking strip for concrete installation, 1600mm	PNC 206152 ❑
• Frontal kicking strip, 800mm (not for refr-freezer base)	PNC 206176 ❑
• Frontal kicking strip, 1000mm (not for refr-freezer base)	PNC 206177 ❑

Electrolux

Modular Cooking Range Line
700XP Two Wells Freestanding Electric Fryer 14 liter

• Frontal kicking strip, 1200mm (not for refr-freezer base)	PNC 206178	❑
• Frontal kicking strip, 1600mm (not for refr-freezer base)	PNC 206179	❑
• 4 feet for concrete installation	PNC 206210	❑
• Pair of side kicking strips	PNC 206249	❑
• Pair of side kicking strips for concrete installation	PNC 206265	❑
• Chimney upstand, 800mm	PNC 206304	❑
• Right and left side handrails	PNC 206307	❑
• BACK HANDRAIL 800 MM - MARINE	PNC 206308	❑
• Door for open base cupboard	PNC 206350	❑
• Base support for feet or wheels - 800mm (700/900)	PNC 206367	❑
• Base support for feet or wheels - 1200mm (700/900)	PNC 206368	❑
• Base support for feet or wheels - 1600mm (700/900)	PNC 206369	❑
• Base support for feet or wheels - 2000mm (700/900)	PNC 206370	❑
• Rear paneling - 800mm (700/900)	PNC 206374	❑
• Rear paneling - 1000mm (700/900)	PNC 206375	❑
• Rear paneling - 1200mm (700/900)	PNC 206376	❑
• Chimney grid net, 400mm	PNC 206400	❑
• 2 side covering panels, h=700mm, d=700mm	PNC 216000	❑
• Full size basket for 14 and 15lt free standing fryers	PNC 921691	❑
• 2 half size baskets for 12, 14 and 15lt fryers	PNC 921692	❑
• Filter for fryer oil collection basin for 7lt, 14lt, 15lt free standing fryers	PNC 921693	❑

The company reserves the right to make modifications to the products without prior notice. All information correct at time of printing.

Modular Cooking Range Line 700XP Two Wells Freestanding Electric Fryer 14 liter

Front

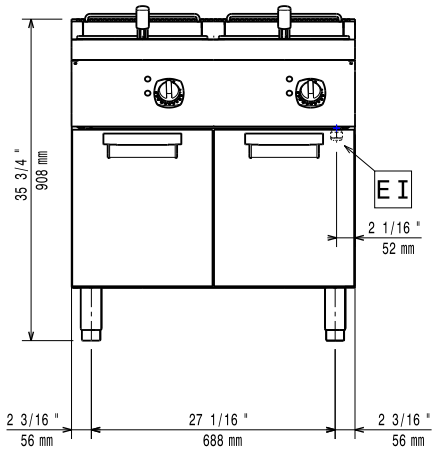

Side

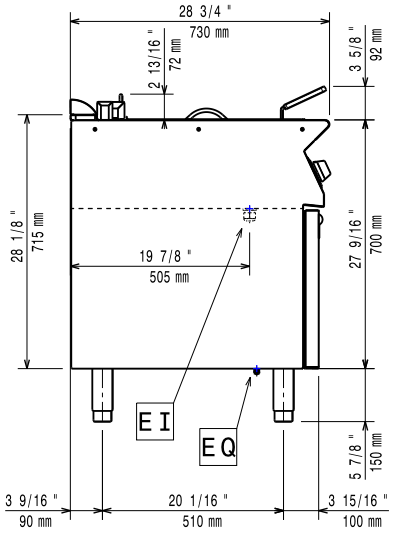

EI = Electrical connection
EQ = Equipotential screw

Top

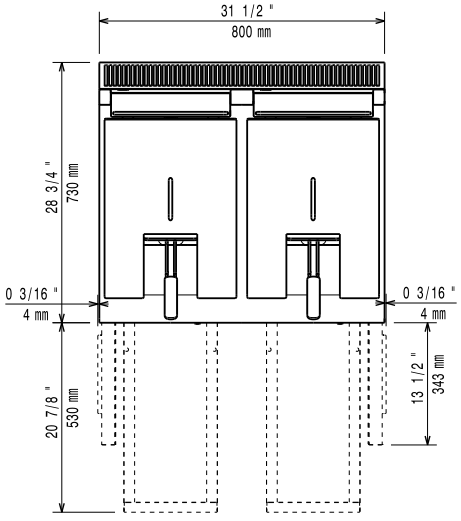

Electric

Supply voltage:	
371085 (E7FREH2FF0)	380-400 V/3N ph/50/60 Hz
371144 (E7FREH2FFN)	230 V/3 ph/50/60 Hz
Total Watts:	17.4 kW

Key Information

Usable well dimensions (width):	240 mm
Usable well dimensions (height):	285 mm
Usable well dimensions (depth):	380 mm
Well capacity:	12 lt MIN; 14 lt MAX
Thermostat Range:	105 °C MIN; 185 °C MAX
Shipping weight:	
371085 (E7FREH2FF0)	90 kg
371144 (E7FREH2FFN)	101 kg
Shipping height:	1140 mm
Shipping width:	820 mm
Shipping depth:	860 mm
Shipping volume:	0.8 m³

If appliance is set up or next to or against temperature sensitive furniture or similar, a safety gap of approximately 150 mm should be maintained or some form of heat insulation fitted.

The company reserves the right to make modifications to the products without prior notice. All information correct at time of printing.

2018.05.02